Beginning Serial Nos. 30000

Service Manual

THE FISHER

courtesy AC5XP

800-C

CHASSIS SERIAL NUMBERS
BEGINNING 30000

$1.00

FISHER RADIO CORPORATION · LONG ISLAND CITY 1 · NEW YORK

TUBE LAYOUT

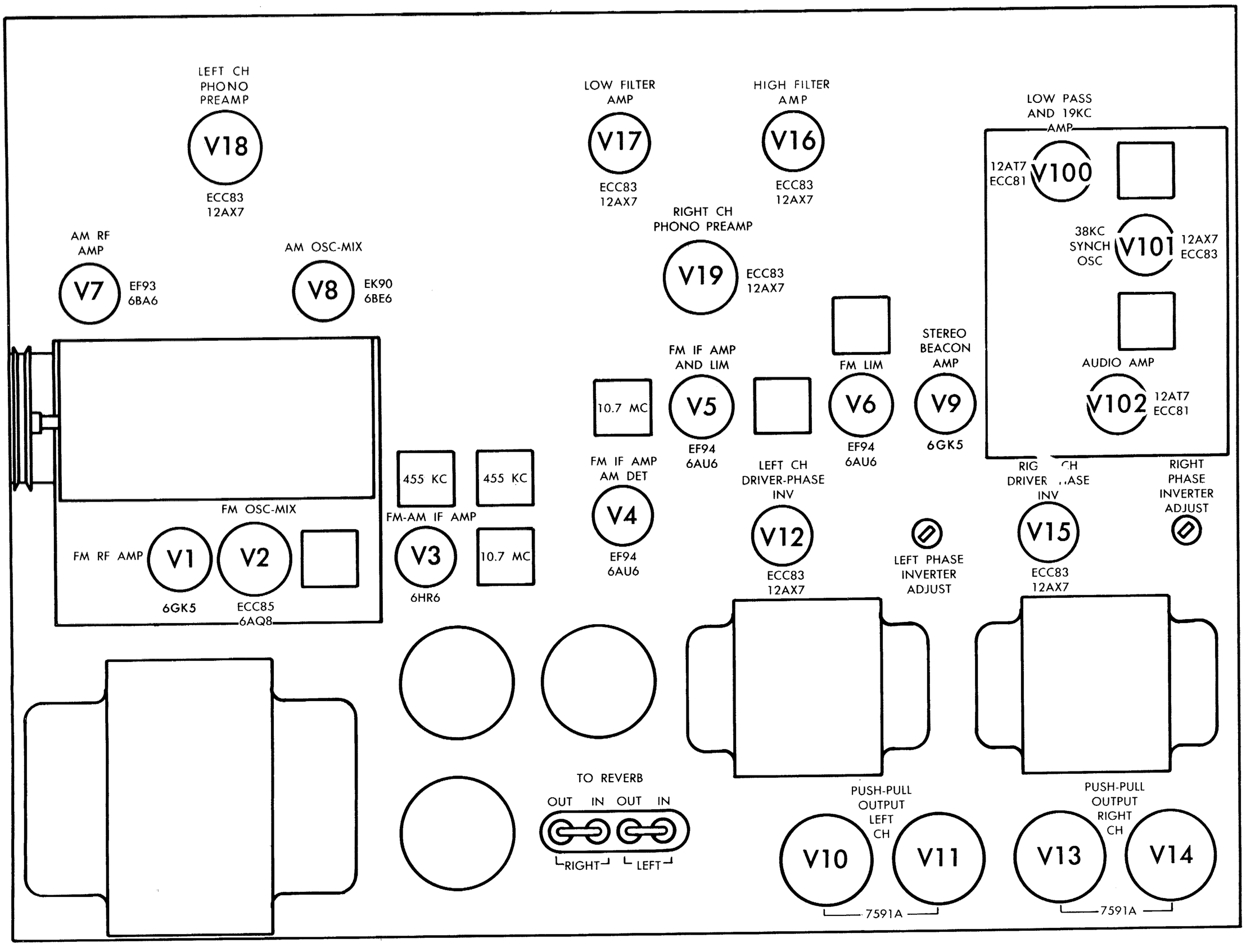
LEFT CH PHONO PREAMP
V18
ECC83 12AX7
LOW FILTER AMP
V17
ECC83 12AX7
HIGH FILTER AMP
V16
ECC83 12AX7
LOW PASS AND 19KC AMP
12AT7 ECC81
V100
38KC SYNCH OSC
V101
12AX7 ECC83
AUDIO AMP
V102
12AT7 ECC81
AM RF AMP
V7
EF93 6BA6
AM OSC-MIX
V8
EK90 6BE6
RIGHT CH PHONO PREAMP
V19
ECC83 12AX7
FM LIM
V6
EF94 6AU6
STEREO BEACON AMP
V9
6GK5
FM IF AMP AND LIM
V5
EF94 6AU6
10.7 MC
FM IF AMP AM DET
V4
EF94 6AU6
LEFT CH DRIVER-PHASE INV
V12
ECC83 12AX7
RIGHT PHASE INVERTER ADJUST
LEFT PHASE INVERTER ADJUST
V15
ECC83 12AX7
455 KC
455 KC
FM-AM IF AMP
V3
6HR6
10.7 MC
FM OSC-MIX
FM RF AMP
V1
6GK5
V2
ECC85 6AQ8
TO REVERB
OUT IN OUT IN
RIGHT LEFT
PUSH-PULL OUTPUT LEFT CH
V10
V11
7591A
PUSH-PULL OUTPUT RIGHT CH
V13
V14
7591A

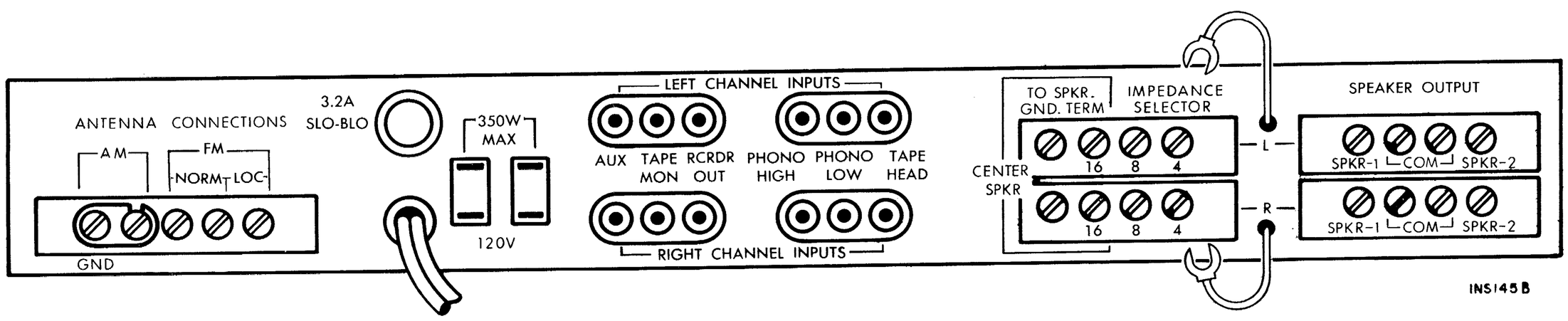
ANTENNA CONNECTIONS
AM
FM
NORM LOC
GND
3.2A SLO-BLO
350W MAX
120V
LEFT CHANNEL INPUTS
AUX TAPE MON
RCRDR OUT
PHONO HIGH
PHONO LOW
TAPE HEAD
RIGHT CHANNEL INPUTS
TO SPKR. GND. TERM
IMPEDANCE SELECTOR
CENTER SPKR
16 8 4
16 8 4
L
R
SPEAKER OUTPUT
SPKR-1 COM SPKR-2
SPKR-1 COM SPKR-2
INS145B

ALIGNMENT INSTRUCTIONS

Read These Instructions With Extreme Care Before Attempting Alignment.

CHASSIS: Turn the station selector completely counterclockwise, without forcing. Dial pointer should be at zero index mark on logging scale. If not, reset the dial pointer. Disconnect the external antennas and the antenna link. Set Ferrite Loop to normal position, parallel to rear panel. When using an oscilloscope for alignment, set the output level controls for no overload, as shown by the proper waveform shape. Connect loads to main output and turn volume control to minimum.

SIGNAL GENERATORS: The signal generator equipment must be able to supply the following: FM RF modulated 30% (±22.5 KC deviation) at 400 cps; AM RF modulated 30% at 400 cps; AM IF with 30KC sweep for AM bandwidth adjustment.

INDICATOR: DC VTVM, AC VTVM, and scope for alignment.

ALIGNMENT: Allow the chassis and test instruments to warm up for at least fifteen minutes. Adjust the line voltage for 117 volts AC, 50-60 cycles. Use fully insulated tools: a small screwdriver for all trimming capacitors; a K-Tran tool for Z1, Z2, Z3, Z4, Z5; a hex tool for L1, L5, L6, L7, L9, L11, Z6 and Z7. For AM alignment, short AVC lead to ground.

NOTE: For calibrating both the AM and FM, use as low an output voltage as possible from your signal generator.

	CHASSIS			SIGNAL GENERATOR			INDICATOR		ALIGNMENT	
STEPS	AM BANDWIDTH	SELECTOR	STATION SELECTOR	COUPLING	FREQ.	MOD.	TYPE	CONNECTION	ADJUST	INDICATION
AM ALIGNMENT										
1	SHARP	AM	Point of no signal and no interference	AM Gen. connected thru .01-uf cap. in series with hot **lead to V8, Pin 7**	455 KC	30% AM at 400 cps	**AC VTVM to Left** Rec. Output		**Z1, Z4 top and bottom**	Maximum voltage
2	BROAD	AM	Point of no signal and no interference	AM Gen. connected thru .01-uf cap. in series with hot **lead to V8, Pin 7**	455 KC	30 KC sweep	**Scope to Left** Rec. Output		**Z4 bottom**	Adjust slightly for symmetrical curve
3	SHARP	AM	600 KC	AM Gen. connected thru 220-uuf to the AM antenna terminal. Disconnect link between terminals.	600 KC	30% AM at 400 cps	**AC VTVM to Left** Rec. Output		**L9, L5, L2**	Maximum voltage
4	SHARP	AM	1400 KC	AM Gen. connected thru 220-uuf to the AM antenna terminal. Disconnect link between terminals.	1400 KC	30% AM at 400 cps	**AC VTVM to Left** Rec. Output		**C12J, C12G, C12E**	Maximum voltage
5	Repeat steps 3 and 4 for proper dial calibration and maximum output.									
FM ALIGNMENT										
6		FM	Point of no signal and no interference	FM Gen. connected to ungrounded tube **shield of V2**	10.7 MC	None	**DC VTVM to test point 3**		Z2, **Z3, Z5, Z6** Z7, top and bottom	Maximum negative voltage
7		FM	Point of no signal and no interference	FM Gen. connected to ungrounded tube **shield of V2**	10.7 MC	None	Connect hot lead of **DC VTVM to TSP4,** ground to junction of resistors (47K) connected in series from TSP3 to GND.		Z7, top	Zero reading on zero center scale
8		FM	90 MC	FM Gen. connected thru two 120-ohm carbon resistors in series with lead to antenna terminals Normal.	90 MC	30% FM (22.5 KC Dev.) at 400 cps	DC VTVM to TSP3 **and scope to Left** Rec. output		**L11, L7, L6, L1**	Check for sine waveform and adjust for maximum negative voltage
9		FM	106 MC	FM Gen. connected thru two 120-ohm carbon resistors in series with lead to antenna terminals Normal.	106 MC	30% FM (22.5 KC Dev.) at 400 cps	DC VTVM to TSP3 **and scope to Left** Rec. output		**C32, C23, C11**	Check for sine waveform and adjust for maximum negative voltage
10	Repeat steps 8 and 9 for proper dial calibration and maximum output.									

ALIGNMENT INSTRUCTIONS • MULTIPLEX SECTION

STEPS	GENERATOR			INDICATOR	ALIGNMENT		
	CONNECTION	AUDIO FREQUENCY	RF MODU-LATION	TYPE & CONNECTION	ADJUST	INDICATION	NOTES
1	Audio oscillator connected to lug 1	80 KC—1 volt	None	AC VTVM to junction of C210 and R228	L100 (Use hex alignment tool)	Minimum voltage	
2	Multiplex generator audio output to lug 1 (See Note 1)	19 KC (±5 cps) pilot tone, 100 mv	None	DC VTVM to T.S.P. 101	Z100 top and bottom (Use hex alignment tool)	Maximum voltage	1
3	Same as Step 2	19 KC pilot tone, 50 mv	None	Scope horiz. input to 19 KC output of gen.; vert. input to junction of C216 and R209. External sweep	Z101 (Use K-tran alignment tool)	Stable 2:1 Lissajous pattern. Disregard phase of pattern	1
4	Same as Step 2	19 KC	None	Same as Step 3	Vary generator 19 KC output from 50 to 200 mv	Lissajous pattern should remain stationary over the entire 150 mv range	1, 2
5	Same as Step 2	1000 cps on left (A) channel only, 1 volt rms (2.8 P-P)	None	AC VTVM and scope vert. input to channel A output lug. Internal sweep. DC VTVM to T.S.P. 101	Z100 top (Use hex tool)	Maximum indication on AC VTVM. Clean 1000 cps waveform on scope	1, 3
6	Same as Step 2	1000 cps on right (B) channel only, 1 volt rms (2.8 P-P)	None	Same as Step 5	MPX separation R215	Minimum reading on AC VTVM should be at least 33 db below reading obtained in Step 5	1
7	Same as Step 2	Same as Step 6	None	Move scope input and AC VTVM to channel B output lug	———	Note and record voltage reading on AC VTVM	1
8	Same as Step 2	1000 cps on left (A) channel only, 1 volt rms (2.8 P-P)	None	Same as Step 7	———	AC VTVM reading should be at least 33 db below reading observed in Step 7	1
9	Same as Step 2	8000 cps on right (B) channel only, 1 volt rms (2.8 P-P)	None	Same as Step 7	———	AC VTVM reading should be the same as observed in Step 7	1
10	Same as Step 2	8000 cps on left (A) channel only, 1 volt rms (2.8 P-P)	None	Same as Step 7	———	AC VTVM reading should be at least 18 db below reading observed in Step 9	1
11	Repeat Steps 9 and 10 with scope and AC VTVM connected to channel A output lug, but start with 8000 cps applied to left channel for first reading, then switch to right channel for second reading.						
12	Multiplex generator RF output to 300-ohm antenna terminals	1000 cps on left (A) channel only	100% (75 KC Dev.) No pre-emphasis	Move scope input and AC VTVM to channel A output lug	———	Note and record voltage reading on AC VTVM	4
13	Same as Step 12	1000 cps on right (B) channel only	Same as Step 12	Same as Step 12	R215	Minimum reading on AC VTVM should be at least 33 db below reading observed in Step 12	4
14	Same as Step 12	8000 cps on left (A) channel only	Same as Step 12	Same as Step 12	———	AC VTVM reading should be 10 db below reading observed in Step 12	4
15	Same as Step 12	8000 cps on right (B) channel only	Same as Step 12	Same as Step 12	———	AC VTVM reading should be 28 db below reading observed in Step 12	4

NOTE: The above procedure is based on the use of the FISHER Model 300 Multiplex Generator.

1 — In steps 2 through 11, the audio output of the Multiplex Generator should be connected to lug 1 of the multiplex sub-chassis through a 12,000 ohm, ½-watt, carbon resistor, and a 180 uuf capacitor should be connected between lug 1 and ground. The wiring from the MPX TEST jack on the main chassis to lug 1 must be disconnected during Steps 2 through 11.

2 — The vertical amplitude of the Lissajous pattern will increase slightly as the generator output is increased. This is a normal occurrence.

3 — If DC VTVM reading falls below —9 volts when maximum reading is obtained on the AC VTVM, readjust bottom of Z100, then repeat Step 5. Repeat this procedure until maximum AC VTVM reading is obtained with DC VTVM reading greater than —9 volts.

4 — Tune the FISHER to the RF output frequency of the Multiplex Generator.

SERVICE NOTES

Receiver Phase Inverter Adjustment

The following procedure is used to balance the phase inverter for minimum IM distortion. Two 4-ohm, 30-watt resistors and an IM distortion analyzer are required for this adjustment.

1 — Connect one of the two 4-ohm loads to the appropriate terminals of each channel.

2 — Turn the equipment on, allowing a few minutes for warmup.

3 — Connect the output of the IM distortion analyzer to the left channel AUX input. (First, remove the connector from the tape recorder, if present.)

4 — Connect the input of the IM distortion analyzer across the 4-ohm load connected to the left channel.

5 — Set the receiver volume control to produce a 25-watt RMS output, as measured across the left channel load.

6 — Set the left channel phase inverter adjustment control for minimum IM distortion.

7 — Connect the output of the IM distortion analyzer to the right channel AUX input, and the analyzer input across the right channel load.

8 — Set the Volume control to produce a 25-watt RMS output, as measured across the right channel load.

9 — Set the right channel phase inverter adjustment control for minimum IM distortion.

DIAL STRINGING PROCEDURE

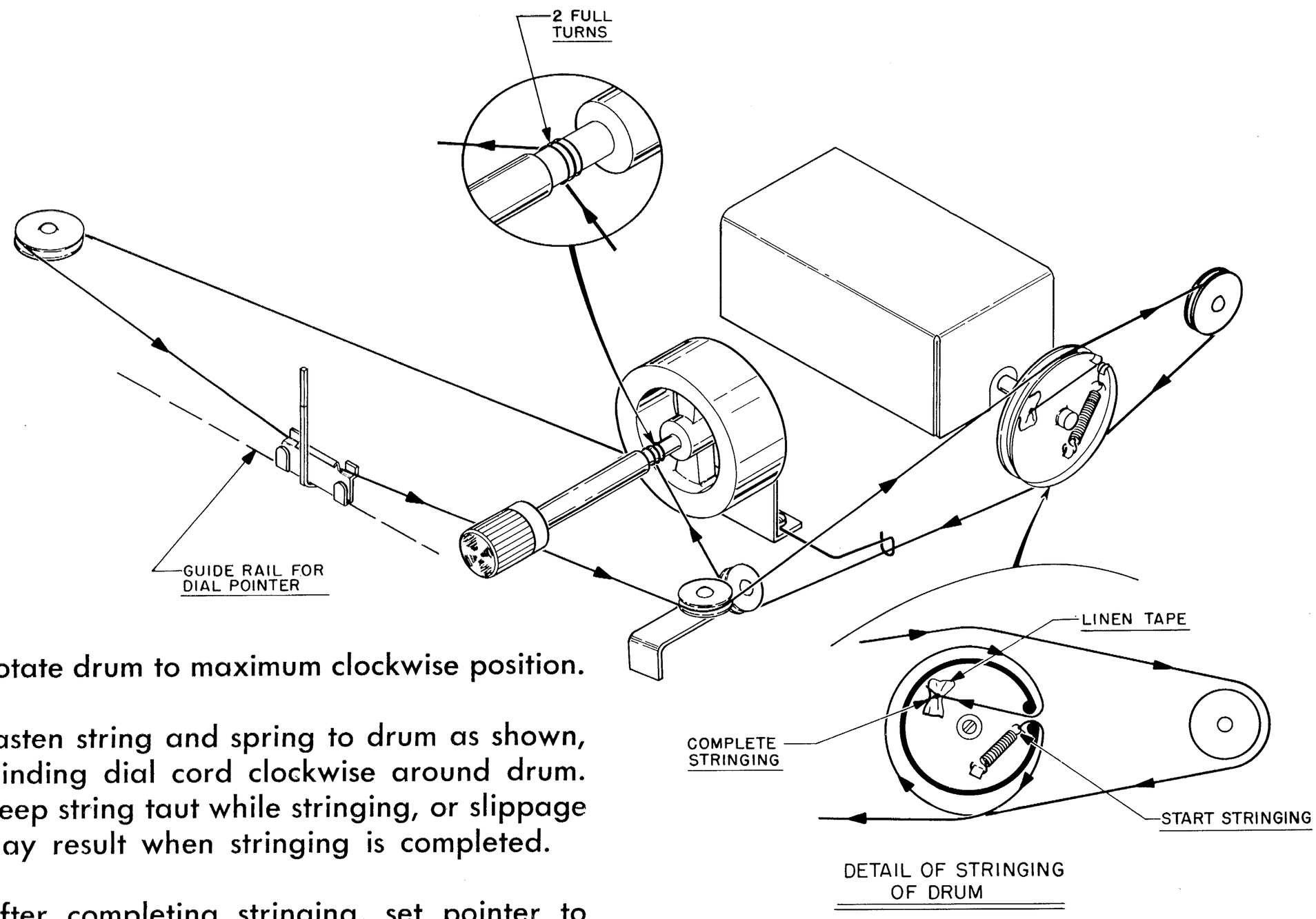

1—Rotate drum to maximum clockwise position.

2—Fasten string and spring to drum as shown, winding dial cord clockwise around drum. Keep string taut while stringing, or slippage may result when stringing is completed.

3—After completing stringing, set pointer to zero (0) on the dial logging scale, and glue pointer to dial cord.

FISHER RADIO CORPORATION · NEW YORK

N990-103CX
© 1964 FISHER RADIO CORPORATION
PRINTED IN U.S.A.

P36C45

PARTS DESCRIPTION LIST

CAPACITORS

10 % tolerance for all fixed capacitors, unless otherwise noted or marked GMV (guaranteed minimum value). All capacitors not marked uf are Pf (uuf).

Symbol	Description	Part No.
C1	Ceramic, 47, 5 %, N750, 1000V	C50070-29
C2	Ceramic, 3, NPO, 1000V	C50070-28
C3	Ceramic, 1000, GMV, 500V	C50089-2
C4, 5, 6	Ceramic, Feedthru, 1000, GMV	C592-187
C7	Ceramic, 10, 5 %, NPO, 1000V	C50070-39
C8	Ceramic, .02uf, +80 —20 %, 100V	C50073-1
C9	Ceramic, 1000, GMV, 500V	C50089-2
C10	Ceramic, 7, ±.5, NPO, 500V	CC20CJ070D5
C11	Ceramic Trimmer	C662-123
C12	Variable, FM-AM	C965-115
C13	Ceramic, .02uf, +80 —20 %, 500V	C50089-4
C14, 15	Ceramic, 18, N470, 1000V	C50070-13
C16	Mylar, .047uf, 630V	C50197-101
C17	Mylar, .047uf, 250V	C50197-52
C18	Mylar, .047uf, 630V	C50197-101
C19	Mylar, .047uf, 250V	C50197-52
C20	Ceramic, .68, 500V	C50077-6N
C21, 22	Ceramic, 1000, 1000V	C50072-3
C23	Ceramic Trimmer	C662-123
C24	Ceramic, 8, ±.5, NPO, 500V	CC20CJ080D5
C27	Ceramic, 68, N750, 500V	CC20UJ680K5
C28	Ceramic, .02uf, +80 —20 %, 500V	C50089-4
C29	Ceramic, 100, 5 %, N1500, 1000V	C50070-19
C30, 31	Ceramic, 100, N1500, 1000V	C50070-6
C32	Ceramic Trimmer	C662-123
C33	Ceramic, 24, 5 %, N150, 1000V	C50070-8
C34	Ceramic, 8, ±.5, N330, 500V	CC20SJ080D5
C35	Ceramic, 1000, 1000V	C50072-3
C36	Ceramic, 68, N2200, 1000V	C50070-12
C37	Ceramic, 6, 5 %, NPO, 1000V	C50070-43
C38	Ceramic, .02uf, +80 —20 %, 100V	C50073-1
C39	Ceramic, 68, N2200, 1000V	C50070-12
C40, 41	Ceramic, .02uf, 20 %, 500V	C50089-5
C42, 43	Ceramic, Feedthru, 1000, GMV	C592-187
C44	Mylar, .047uf, 400V	C50197-30
C45	Ceramic, 820, 1000V	C50072-7
C46	Mylar, .047, 400V	C50435-25
C47	Ceramic, 820, 1000V	C50072-7
C48	Ceramic, .02, +80 —20 %, 100V	C50073-1
C49	Mylar, .047uf, 250V	C50197-52
C50	Ceramic, 100, N1500, 1000V	C50070-6
C51	Ceramic, 2700, 1000V	C50072-17
C52, 53	Ceramic, 5000, +80 —20 %, 500V	C50089-6
C54, 55	Ceramic, 100, 5 %, N1500, 1000V	C50070-19
C56	Ceramic, 1, 20 %, P100, 1000V	C50070-1
C57	Ceramic, .02uf, 20 %, 500V	C50089-5
C58	Ceramic, 150, 1000V	C50072-18
C59	Ceramic, 5000, +80 —20 %, 500V	C50089-6
C60	Mylar, .1uf, 125V	C50435-7
C61	Ceramic, 2700, 1000V	C50072-17
C62	Ceramic, .02uf, GMV, 1000V	C50071-6
C63	Ceramic, 5000, +80 —20 %, 500V	C50089-6
C64	Mylar, .1uf, 125V	C50435-7
C65	Electrolytic, 2uf, 70V	C721-142
C66	Polystyrene, 1800, 5 %, 125V	CP50394-11
C67	Electrolytic, .5uf, 350V	C50283-7
C68	Ceramic, .02uf, 20 %, 500V	C50089-5
C69	Ceramic, 2200, 1000V	C50072-5
C70	Ceramic, .02uf, 20 %, 500V	C50089-5
C71	Ceramic, 2200, 1000V	C50072-5
C72	Ceramic, 24, 5 %, N150, 1000V	C50070-8
C73	Mylar, .1uf, 125V	C50435-7
C74	Ceramic, .02uf, +80 —20 %, 100V	C50073-1
C75, 76	Ceramic, 1000, 1000V	C50072-3
C77, 78	Ceramic, 120, N1500, 1000V	C50070-9
C79, 80	Ceramic, 24, 5 %, N150, 1000V	C50070-8
C81	Ceramic, 2700, 1000V	C50072-17
C82, 83, 84, 85, 86	Ceramic, 5000, +80 —20 %, 500V	C50089-6
C87	Electrolytic, 4 Section:	C50180-49
	A — 20uf, 300V	
	B — 40uf, 400V	
	C — 40uf, 450V	
	D — 40uf, 500V	
C88, 89, 90	Ceramic, 5000, +80 —20 %, 500V	C50089-6
C91	Electrolytic, 4 Section:	C50180-48
	A — 50uf, 250V	
	B — 50uf, 250V	
	C — 50uf, 250V	
	D — 200uf, 250V	
C92	Mylar, .1uf, 250V	C50197-54
C93, 94	Ceramic, 5000, +80 —20 %, 500V	C50089-6
C95	Electrolytic, 2 Section:	C50180-38
	A — 1000 uf, 35V	
	B — 1000 uf, 35V	
C96	Ceramic, 560, 1000V	C50072-14
C97	Ceramic, 2700, 1000V	C50072-17
C98	Electrolytic, 200uf, 250V	C50180-20
C99	Mylar, .022uf, 250V	C50197-49
C100	Ceramic, 5000, +80 —20 %, 500V	C50089-6
C101	Mylar, .022uf, 250V	C50197-49
C102	Ceramic, .02uf, GMV, 1000V	C50071-6
C103	Ceramic, Feedthru, 1000, GMV	C592-187
C104	Molded, .01uf, 20 %, 600V	C2747
C105, 106	Ceramic, .01uf, 20 %, 500V	C50089-3
C107, 108, 109	Ceramic, 330, 1000V	C50072-1
C110	Molded, .01uf, 20 %, 600V	C2747
C111	Electrolytic, 8uf, 50V	C629-138
C112, 113	Ceramic, 100, GMV, N1500, 1000V	C50070-5
C116, 117	Electrolytic, 50uf, 10V	C50283-6
C118	Mylar, .1uf, 125V	C50435-7

RESISTORS & POTENTIOMETERS

In ohms, 5 % tolerance, 1/8 Watt, unless otherwise noted. K=Kilohms, M=Megohms.

Symbol	Description	Part No.
R1	Wirewound, 25, 10 %, 5W	R688-117
R2	Composition, 270, 10 %, 1/2 W	RC20BF271K
R3	Composition, 100K, 10 %, 1/2 W	RC20BF104K
R4	Composition, 330, 10 %, 1W	RC20BF331K
R6	Wirewound, 25, 10 %, 5W	R688-117
R8	Composition, 330, 10 %, 1W	RC30BF331K
R9	Dep. Carbon, 47	R12DC470J
R12	Dep. Carbon, 100K	R12DC104J
R13	Dep. Carbon, 1M, 1/3 W	R33DC105J
R14	Composition, 100, 10 %, 1/2 W	RC20BF101K
R15	Dep. Carbon, 1.8M, 1/3 W	R33DC185J
R16	Composition, 47K, 10 %, 1/2 W	RC20BF473K
R17, 18, 19, 20	Dep. Carbon, 1K, 1/3 W	R33DC102J
R21, 22, 23, 24, 25	Dep. Carbon, 330K	R12DC334J
R26	Dep. Carbon, 180K, 1/3 W	R33DC184J
R27	Dep. Carbon, 2.2K, 1/3 W	R33DC222J
R28	Dep. Carbon, 180K, 1/3 W	R33DC184J
R29	Dep. Carbon, 2.2K, 1/3 W	R33DC222J
R30, 31	Dep. Carbon, 68K, 1/3 W	R33DC683J
R32	Dep. Carbon, 22K	R12DC223J
R33, 34	Dep. Carbon, 33K, 1/3 W	R33DC333J
R35	Dep. Carbon, 2.2K, 1/3 W	R33DC222J
R36	Dep. Carbon, 220, 1/3 W	R33DC221J
R37	Dep. Carbon, 2.2K, 1/3 W	R33DC222J
R38	Dep. Carbon, 220, 1/3 W	R33DC221J
R39, 40	Potentiometer, 25K, Phase Inverter Adj.	R50103-2
R41	Compostion, 18K, 10 %, 1W	RC30BF183K
R42, 43	Dep. Carbon, 470K, 1/3 W	R33DC474J
R44	Dep. Carbon, 470K	R12DC474J
R45, 46	Dep. Carbon, 47K	R12DC473J
R47	Potentiometer, 500K, Dual Volume	R50160-104
R48	Dep. Carbon, 27	R12DC270J
R49	Dep. Carbon, 2.7K	R12DC272J
R50, 51	Dep. Carbon, 270	R12DC271J

PARTS DESCRIPTION LIST

R52	Composition, 1K, 10%, ½W	RC20BF102K
R53	Composition, 2.7, 10%, ½W	RC20BF272K
R54, 55	Dep. Carbon, 22K	R12DC223J
R56	Composition, 1K, 10%, ½W	RC20BF102K
R57	Potentiometer, 300K, Dual Balance	R50160-130
R58	Dep. Carbon, 56K	R12DC563J
R59, 60	Dep. Carbon, 2.7M, ⅓W	R33DC275J
R61, 62	Dep. Carbon, 120K, ⅓W	R33DC124J
R63, 64	Dep. Carbon, 1K, ⅓W	R33DC102J
R65	Composition, 180, 10%, ½W	RC20BF181K
R66	Dep. Carbon, 3.3M, ⅓W	R33DC335J
R67	Dep. Carbon, 39K	R12DC393J
R68	Dep. Carbon, 1K	R12DC102J
R69	Composition, 27K, 10%, ½W	RC20BF273K
R70	Composition, 1K, 10%, ½W	RC20BF102K
R71	Dep. Carbon, 39K	R12DC393J
R72	Composition, 10K, 10%, ½W	RC20BF103K
R73	Composition, 100, 10%, ½W	RC20BF101K
R74, 75	Dep. Carbon, 220K	R12DC224J
R76	Dep. Carbon, 82K	R12DC823J
R77, 78	Dep. Carbon, 680K	R12DC684J
R79, 80	Potentiometer, 500K, Dual Bass, Treble	R50160-101-2
R81	Dep. Carbon, 680K	R12DC684J
R82	Dep. Carbon, 150K	R12DC154J
R83	Dep. Carbon, 820K	R12DC824J
R84	Composition, 150, 10%, ½W	RC20BF151K
R85	Dep. Carbon, 470K	R12DC474J
R86	Dep. Carbon, 270K	R12DC274J
R87	Composition, 47K, 10%, ½W	RC20BF473K
R88	Dep. Carbon, 47K	R12DC473J
R89	Dep. Carbon, 820K	R12DC824J
R90	Composition, 1K, 10%, ½W	RC20BF102K
R91	Dep. Carbon, 820K	R12DC824J
R92	Dep. Carbon, 56K	R12DC563J
R93, 94	Dep. Carbon, 820K	R12DC824J
R95	Dep. Carbon, 68K	R12DC683J
R96	Dep. Carbon, 120K, ⅓W	R33DC124J
R97	Dep. Carbon, 1K, ⅓W	R33DC102J
R98	Dep. Carbon, 120K, ⅓W	R33DC124J
R99	Dep. Carbon, 1K, ⅓W	R33DC102J
R100	Dep. Carbon, 2.2M, ⅓W	R33DC225J
R101	Composition, 220, 10%, ½W	RC20BF221K
R102	Dep. Carbon, 2.7M, ⅓W	R33DC275J
R103	Dep. Carbon, 1.5M, ⅓W	R33DC155J
R104	Dep. Carbon, 2.7M, ⅓W	R33DC275J
R105	Dep. Carbon, 1.5M, ⅓W	R33DC155J
R106	Composition, 220, 10%, ½W	RC20BF221K
R107, 108	Dep. Carbon, 470K	R12DC474J
R109, 110	Dep. Carbon, 330K	R12DC334J
R111	Dep. Carbon, 22K	R12DC223J
R112	Composition, 100, 10%, ½W	RC20BF101K
R113	Composition, 82K, 10%, ½W	RC20BF823K
R114	Composition, 1K, 10%, ½W	RC20BF102K
R115	Composition, 82K, 10%, ½W	RC20BF823K
R116	Dep. Carbon, 47K	R12DC473J
R117	Composition, 22K, 10%, ½W	RC20BF223K
R118	Dep. Carbon, 180	R12DC180J
R119	Dep. Carbon, 8.2K, ⅓W	R33DC822J
R120	Composition, 2.7K, 10%, 1W	RC30BF272K
R121	Glass, 470, 10%, 3W	RPG3W471K
R122	Dep. Carbon, 27K, ⅓W	R33DC273J
R123	Composition, 1.2K, 10%, 1W	RC30BF122K
R125, 126	Dep. Carbon, 82K	R12DC823J
R127	Wirewound, 15, 10%, 5W	R719-106
R128	Glass, 1.2K, 10%, 7W	RPG7W122K
R129	Glass, 470, 10%, 3W	RPG3W471K
R130	Dep. Carbon, 330K	R12DC334J
R131	Composition, 68K, 10%, ⅓W	RC20BF683K
R132	Dep. Carbon, 330K	R12DC334J
R135, 136	Dep. Carbon, 4.7M, ⅓W	R33DC475J
R137	Composition, 1K, 10%, ½W	RC20BF102K
R138	Composition, 270, ½W	RC20BF271J
R139, 140	Dep. Carbon, 220K, ⅓W	R33DC224J
R141, 142	Glass, 330K, 1W	R30G334J
R143	Dep. Carbon, 10K	R12DC103J
R144	Glass, 2.7K, ½W	R20G272J
R145	Dep. Carbon, 10K	R12DC103J
R146	Glass, 2.7K, ½W	R20G272J
R147	Composition, 820K, 10%, ½W	RC20BF824K
R148	Dep. Carbon, 100K	R12DC104J
R149	Dep. Carbon, 10	R12DC100J
R150	Dep. Carbon, 100K	R12DC104J
R151	Dep. Carbon, 10	R12DC100J
R152	Composition, 1.5K, ½W	RC20BF152J
R153	Composition, 1K, ½W	RC20BF102J
R154	Dep. Carbon, 15K, ⅓W	R33DC153J
R155	Dep. Carbon, 150K	R12DC154J
R156	Dep. Carbon, 68K	R12DC683J
R157	Dep. Carbon, 150K	R12DC154J
R158	Dep. Carbon, 68K	R12DC683J
R159, 160	Dep. Carbon, 220K	R12DC224J

COILS, CHOKES & TRANSFORMERS

Symbol	Description	Part No.
L1	FM Antenna Coil	L965-119
L2	AM Ferrite Loop	L990-132
L3	Choke, Ferrite Bead	L592-189
L4	Choke, 1.5 Microhenry	L50066-4
L5	AM-RF Transformer	L50210-35
L6	FM-RF Coil	L965-116
L7	FM Mixer Coil	L965-117
L8	Choke, 1 Microhenry	L50066-2
L9	AM Oscillator Coil	L50210-28
L10	Choke, 1 Microhenry	L50066-2
L11	FM Oscillator Coil Assembly	AS965-120
L12, 13, 14	Choke, 1 Microhenry	L50066-2
L16 thru 27	Choke, Filament, Ferrite Bead	L592-189
L28	Choke, 3.3 Microhenries	L50066-8
T1	Transformer, Power	T991-115
T2	Transformer, Output	T991-116-1
T3	Transformer, Output	T991-116-2
Z1	Transformer, AM, IF	ZZ50210-41
Z2	Transformer, FM, IF	ZZ50210-42
Z3	Transformer, FM, IF	ZZ50210-39
Z4	Transformer, AM, IF	ZZ2984
Z5	Transformer, FM, IF	ZZ50210-2
Z6	FM Limiter Coil	ZZ50210-6
Z7	FM Ratio Detector	ZZ50210-9

MISCELLANEOUS

Symbol	Description	Part No.
CR2, 3, 4, 5	Diode, Silicon	V50260-10
CR6, 7	Diode, Silicon	SR50411-1
F1	Fuse, 3.2 Amp Slo-Blo	F3319
I1	Lamp, #47 OF	I50009-4
I2, 3	Lamp, Dial	I50441-4
I4	Lamp, #47 OF, Stereo Beacon	I50009-4
J1	Headphone Jack	J846-120-1
M1	Meter, Tuning	M990-124
PC1	Printed Circuit	PC50434
PC2, 3	Printed Circuit, High Filter	PC50187-2
PC4, 5	Printed Circuit, Tone Control	PC50187-9
PC6, 7	Printed Circuit, Equalization	PC50187-3
RL1	Relay	K50314
S1	Switch, Selector	S990-131BX
S2	Switch, Slide, AM Bandwidth	S50200-5
S3	Switch, Speaker Selector	S990-130
S4	Switch, Loudness Contour	S990-129
S5, 6, 7	Switch, Slide	S50200-5
S8	Switch, Power	part of R47
SR1	Selenium Rectifier, Bridge	SR50253-1
—	FM Dipole Assembly	AS50227-1
—	Dress Panel	AS990-108
—	Knob, Dummy Dual	E50324
—	Knob, Dual, Rear	E50221
—	Knob, Dual, Front	E50323
—	Knob, Tuning	E50325-2
—	Knob, Speaker Selector	E50325-2
—	Dial Glass	N990-107
—	Fuse Holder	X563-551

SCHEMATIC DIAGRAM

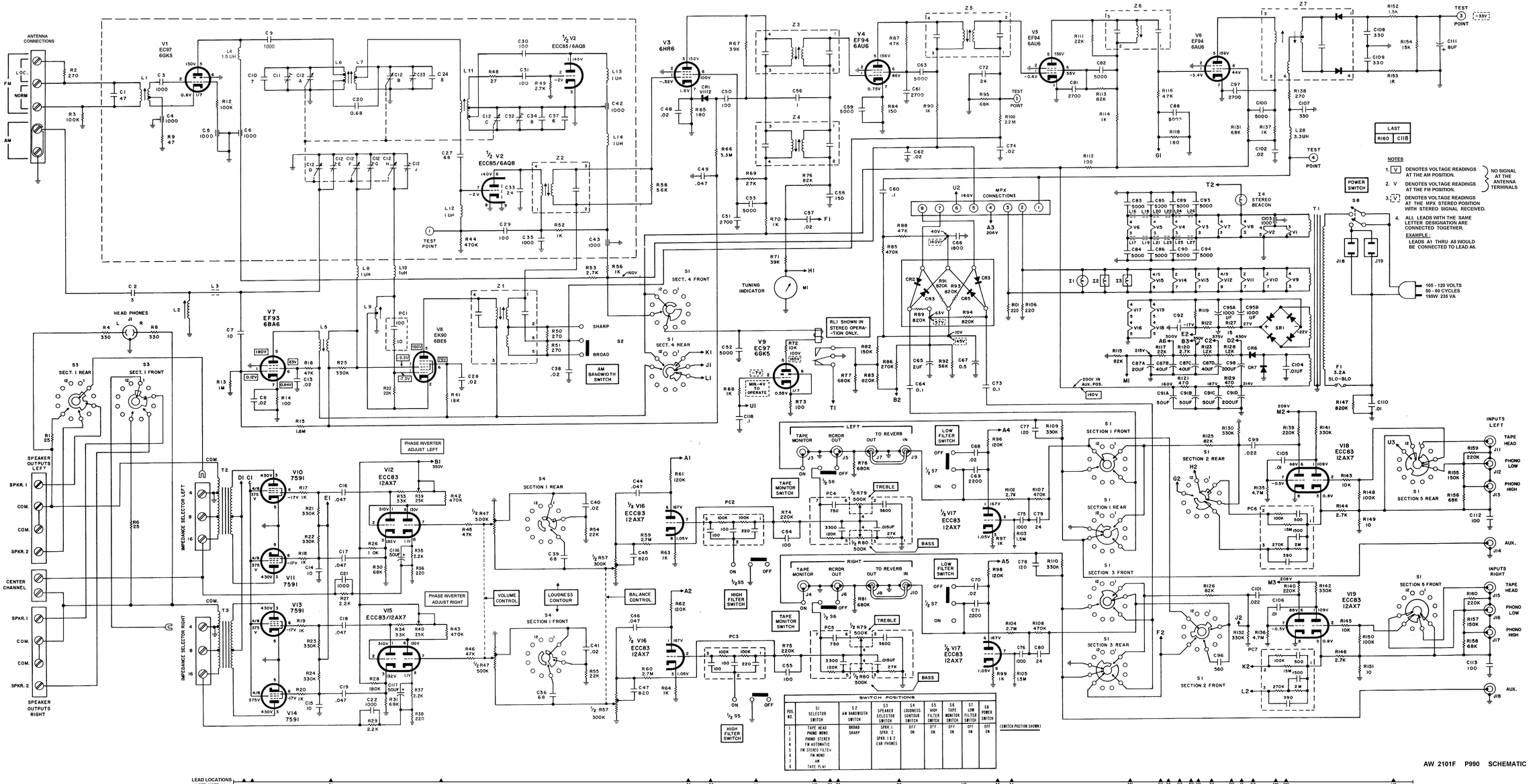

POS. NO.	S1 SELECTOR SWITCH	S2 AM BANDWIDTH SWITCH	S3 SPEAKER SELECTOR SWITCH	S4 LOUDNESS CONTOUR SWITCH	S5 HIGH FILTER SWITCH	S6 TAPE MONITOR SWITCH	S7 LOW FILTER SWITCH	S8 POWER SWITCH
1	TAPE HEAD	BROAD	SPKR. 1	OFF	OFF	OFF	OFF	OFF
2	PHONO MONO	SHARP	SPKR. 2	ON	ON	ON	ON	ON
3	PHONO STEREO		SPKR. 1 & 2					
4	FM AUTOMATIC		EAR PHONES					
5	FM STEREO FILTER+							
6	FM MONO							
7	AM							
8	TAPE PLAY							

AW 2101F P990 SCHEMATIC

PARTS DESCRIPTION LIST • MULTIPLEX SECTION

CAPACITORS

10 % tolerance for all fixed capacitors, unless otherwise noted or marked GMV (guaranteed minimum value). All capacitors not marked uf are pF (uuf).

Symbol	Description	Part No.
C200	Ceramic, .01uf, +80 —20 %, 500V	C50089-7
C201	Ceramic, 680, 1000V	C50072-2
C203	Ceramic, 220, 1000V	C50183-3
C204	Polystyrene, 470, 5 %, 500V	C50394-1
C205	Ceramic, 82, 1000V	C50070-1
C206	Ceramic, 1000, GMV, 500V	C50089-2
C207	Ceramic, 5000, +80 —20 %, 500V	C50089-6
C208, 209	Mica, 4700, 5 %, 500V	C50332-5
C210	Electrolytic, 1uf, 350V	C50283-3
C211	Ceramic, 1000, GMV, 500V	C50089-2
C212	Ceramic, .05uf, +80 —20 %, 100V	C50073-2
C214	Mylar, 4700, 400V	C50197-25
C215	Mica, 3900, 5 %, 500V	C50332-6
C216, 217	Ceramic, 1000, GMV, 500V	C50089-2
C218	Ceramic, .02uf, 20 %, 500V	C50089-5
C219	Ceramic, 330, 1000V	C50183-5
C220	Ceramic, .02uf, 20 %, 500V	C50089-5
C221, 222	Mylar, .047uf, 250V	C50197-52
C223, 224	Ceramic, 1000, 1000V	C50072-3
C225, 226	Ceramic, 2200, 1000V	C50072-5

RESISTORS

In ohms, 5 % tolerance, 1/8 W unless otherwise noted. K=Kilohms, M=Megohms.

Symbol	Description	Part No.
R200	Compositior, 22M, 10 %, 1/2 W	RC20BF226K
R201	Composition, 4.7K, 1/2 W	RC20BF472J
R202	Composition, 15K, 1/2 W	RC20BF153J
R203	Composition, 10M, 10 %, 1/2 W	RC20BF106K
R204	Dep. Carbon, 1M	R12DC105J
R205	Dep. Carbon, 220K, 1/3 W	R33DC224J
R207	Dep. Carbon, 1M	R12DC105J
R208	Dep. Carbon, 22K	R12DC223J
R209, 210, 211, 212	Dep. Carbon, 33K	R12DC333J
R213, 214	Dep. Carbon, 100K	R12DC104J
R215	Potentiometer, 50K, MPX Separation	R50150-4
R216	Composition, 22M, 10 %, 1/2 W	RC20BF226K
R217, 218	Dep. Carbon, 18K, 1/3 W	R33DC183J
R219, 220	Dep. Carbon, 15K, 1/3 W	R33DC153J
R221	Composition, 22M, 10 %, 1/2 W	RC20BF226K
R222, 223	Dep. Carbon, 27K	R12DC273J
R224, 225	Dep. Carbon, 22K	R12DC223J
R226, 227, 228, 229, 230, 231	Dep. Carbon, 1M	R12DC105J

MISCELLANEOUS

Symbol	Description	Part No.
CR100	Diodes, Type 1112	V-1112
CR102, 103	Bridge	V50160-13
L100	Coil, low pass	L50210-30
L101	Coil, 5.25MH	L50334-1
L102, 103	Coil, 20MH	L50334-2
Z100	Transformer, 19Kc	ZZ50210-34
Z101	Coil, 38Kc	ZZ50210-33

SCHEMATIC DIAGRAM • MULTIPLEX SECTION

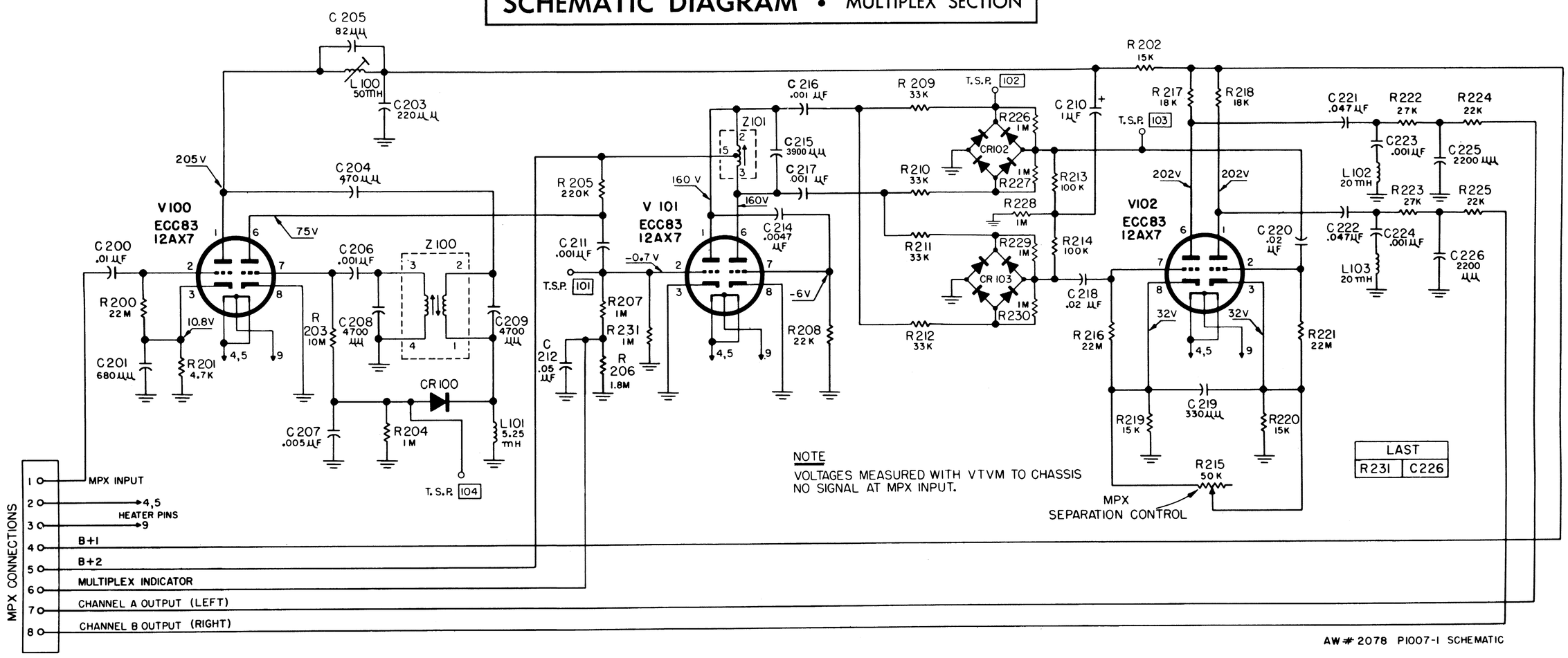

AW # 2078 P1007-1 SCHEMATIC